PARTS BREAKDOWN

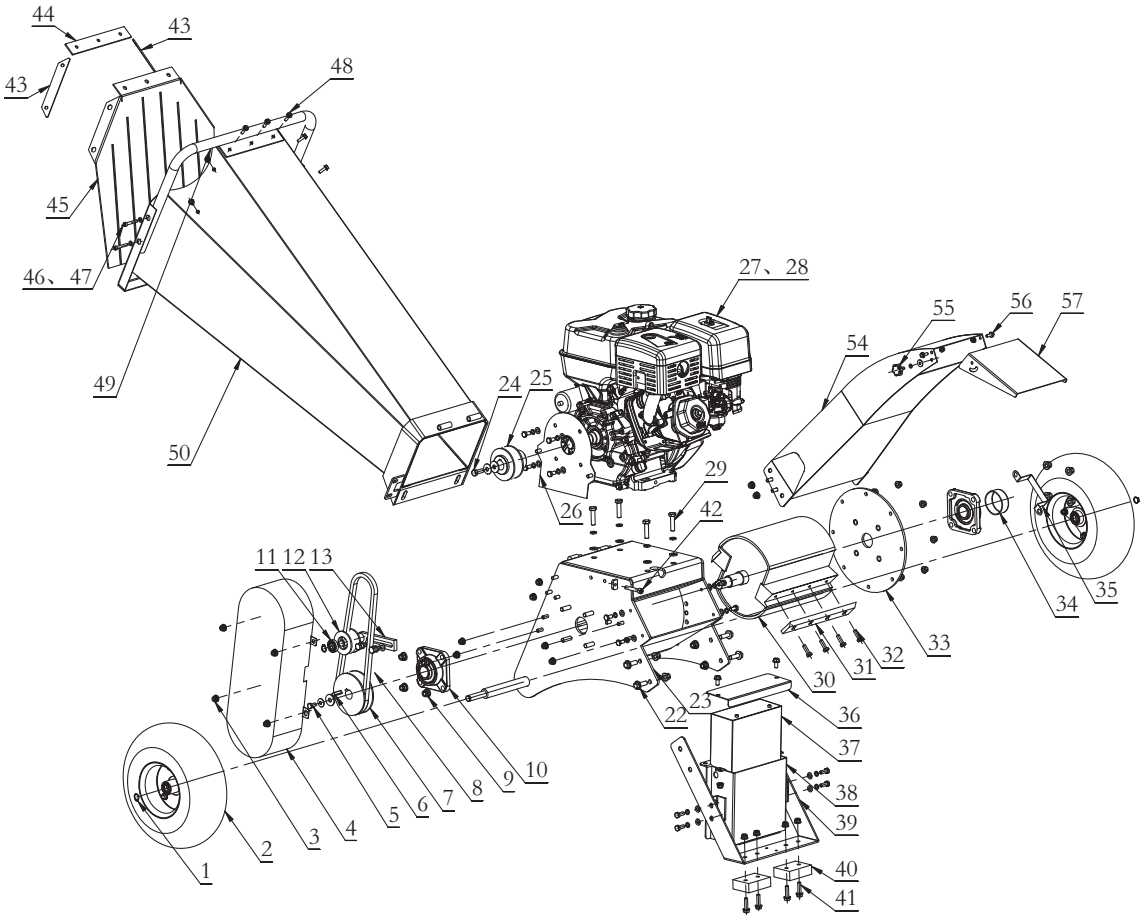

Part No.	Description	Q'ty	Part No.	Description	Q'ty
1	Circlips	3	32	Bolt M8x25	8
2	Wheel	2	33	Side cover	1
3	Flange nut M8	34	34	Bearing cover	1
4	Belt cover	1	35	Bearing cover plate	1
5	Bolt M8x16	9	36	Box cover (Only apply on electric start engine)	1
6	Key parallel pin	1	37	Battery (Only apply on electric start engine)	1
7	Pulley	1	38	Battery box (Only apply on electric start engine)	1
8	Belt	2	39	Support stand	1
9	Flange nut M10	14	40	Stand pad	2
10	Bearing Seat	2	41	Flange Bolt M8x30	4
11	Bearing	2	42	Socket head cap screw M8x50	1
12	Clutch	1	43	Guard plate	2
13	Clutch support	1	44	Guard plate	1
14	Switch box	2	45	Hopper guard	1
22	Flange Bolt M10x30	6	46	Socket head cap screw M6x40	4
23	Base frame	1	47	Flange nut M6	13
24	Hex head bolts	1	48	Flange Bolt M6x20	7
25	Engine pulley	1	49	Handle	1
26	Connection plate	1	50	In-feed bin	1
27	Engine	1	54	Discharge chute	1
28	Engine flat key	1	55	Handwheel	1
29	Bolt M10x40	4	56	Flange Bolt M6x16	2
30	Chipper drum	1	57	Splash guard	1
31	Knife	2			

: